Tec Motors

Standards and Standardisations

Motors in the TECA, ECOL TA & ECOL TC design comply with the following standards.

RATINGS & PERFORMANCES
IEC 60034-1 CEI EN 60034-1

METHODS FOR DETERMINING LOSSES AND EFFICIENCY IEC 60034-2 CEI EN 60034-2

ROTATING ELECTRICAL MACHINES, PART 30, EFFICIENCY CLASSES OF SINGLE SPEED, THREE PHASE INDUCTION MOTORS (IE CODE) IEC 60034-30 edition1

CLASSIFICATION OF DEGREES OF PROTECTION (IP CODE) IEC 60034-5 CEI EN 60034-5

METHODS OF COOLING (IC CODE) IEC 60034-6 CEI EN 60034-6

CLASSIFICATION OF TYPE OF CONSTRUCTION MOUNTING ARRANGEMENTS (IM CODE) IEC 60034-7 CEI EN 60034-7

TERMINAL MARKINGS AND DIRECTION OF ROTATION IEC 60034-8 CEI EN 60034-8

NOISE LIMITS IEC 60034-9 CEI EN 60034-9

BUILT-IN THERMAL PROTECTION IEC 60034-11

STARTING PERFORMANCE OF ROTATING ELECTRICAL MACHINES IEC 60034-12 CEI EN 60034-12

MECHANICAL VIBRATIONS IEC 60034-14 CEI EN 60034-14

DIMENSIONS AND OUTPUTS FOR ELECTRICAL MACHINES CEI EN 50347 IEC 60072-1 IEC 60072-2

The coupling dimensions are in compliance with the following standardisations;
UNEL 13113-71 for the B3 mounting and for other frame types
UNEL 13117-71 for the B5 mounting and for other frame types

The UNEL standardisations are in accordance with the IEC International Standards publication 72 and relative amendment Nr.1

BearingsRUs

Tec Motors

TECA Aluminium Series – MS Design

Three Phase Asynchronous single speed motors

B3 Type – Foot Mounted

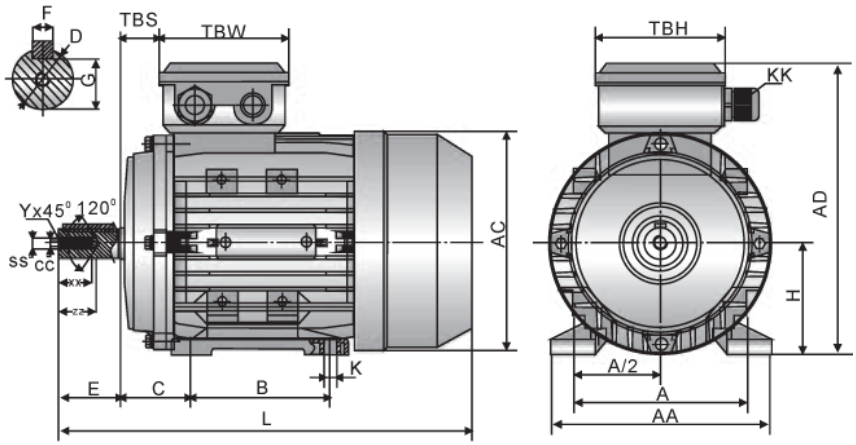

Frame Size	B3					General							
	H	A	B	C	K	AA	AD	HD	AC	L	TBS	TBW	TBH
56	56	90	71	36	5.8 x 8.8	110	156	100	Ø 117	196	14	14	88
63	63	100	80	40	7 x 10	120	171	108	Ø 130	220	14	14	94
71	71	112	90	45	7 x 10	132	186	115	Ø 147	241	20	20	94
80	80	125	100	50	10 x 13	160	213	133	Ø 163	290	27	27	105
90S	90	140	100	56	10 x 13	175	229	139	Ø 183	312	30	30	105
90L1/L2	90	140	125	56	10 x 13	175	229	139	Ø 183	337/367	30	30	105
100	100	160	140	63	12 x 15	198	252	152	Ø 205	369	26	26	105
112	112	190	140	70	12 x 15	220	279	167	Ø 229	395	32	32	112
132S	132	216	140	89	12 x 15	252	318	186	Ø 265	437	38	38	112
132M/L	132	216	178	89	12 x 15	252	318	186	Ø 265	475/501	38	38	112
160M/L	160	254	210/254	108	15 x 19	290	384	224	Ø 325	640	64	64	143
180M/L	180	279	241/279	121	15 x 19	340	440	260	Ø 368	730	73	73	190
200L	200	318	305	133	19 x 29	390	460	260	Ø 368	745	85	85	190

Frame Size	Shaft						
	D	E	F	G	SS	XX	ZZ
56	Ø9	20	3	7.2	M3	9	12
63	Ø 11	23	4	8.5	M4	10	14
71	Ø 14	30	5	11	M5	12	17
80	Ø 19	40	6	15.5	M6	16	21
90S	Ø 24	50	8	20	M8	19	25
90L1/L2	Ø 24	50	8	20	M8	19	25
100	Ø 28	60	8	24	M10	22	30
112	Ø 28	60	8	24	M10	22	30
132S	Ø 38	80	10	33	M12	28	37
132M/L	Ø 38	80	10	33	M12	28	37
160M/L	Ø 42	110	12	27	M16	36	45
180M/L	Ø 48	110	14	42.5	M18	36	45
200L	Ø 55	110	16	49	M20	42	53

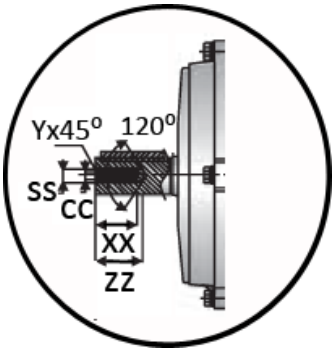

Tec Motors

TECA Aluminium Series – MS Design

Three Phase Asynchronous single speed motors

B5 Type – Flange Mounted

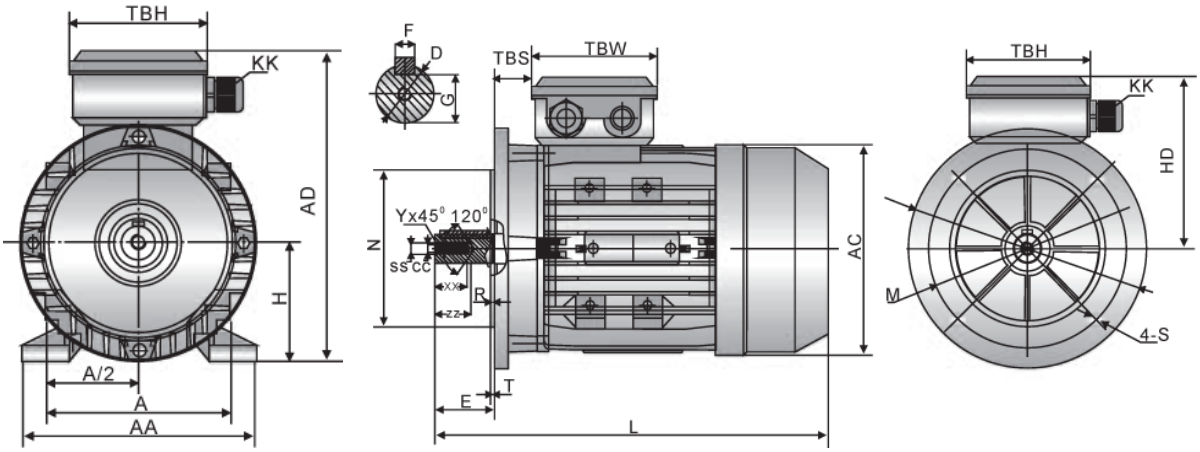

Frame Size	B5 Flange						General							
	D	M	N	P	R	S	AA	AD	HD	AC	L	TBS	TBW	TBH
56	Ø9	Ø 100	Ø 80	Ø 120	3.0	Ø 7	110	156	100	Ø 117	196	14	14	88
63	Ø 11	Ø 115	Ø 95	Ø 140	3.0	Ø 10	120	171	108	Ø 130	220	14	14	94
71	Ø 14	Ø 130	Ø 110	Ø 160	3.5	Ø 10	132	186	115	Ø 147	241	20	20	94
80	Ø 19	Ø 165	Ø 130	Ø 200	3.5	Ø 12	160	213	133	Ø 163	290	27	27	105
90S	Ø 24	Ø 165	Ø 130	Ø 200	3.5	Ø 12	175	229	139	Ø 183	312	30	30	105
90L1/L2	Ø 24	Ø 165	Ø 130	Ø 200	3.5	Ø 12	175	229	139	Ø 183	337/367	30	30	105
100	Ø 28	Ø 215	Ø 180	Ø 250	4.0	Ø 15	198	252	152	Ø 205	369	26	26	105
112	Ø 28	Ø 215	Ø 180	Ø 250	4.0	Ø 15	220	279	167	Ø 229	395	32	32	112
132S	Ø 38	Ø 265	Ø 230	Ø 300	4.0	Ø 15	252	318	186	Ø 265	437	38	38	112
132M/L	Ø 38	Ø 265	Ø 230	Ø 300	4.0	Ø 15	252	318	186	Ø 265	475/501	38	38	112
160M/L	Ø 42	Ø 300	Ø 250	Ø 350	5.0	Ø 19	290	384	224	Ø 325	640	64	64	143
180M/L	Ø 48	Ø 300	Ø 250	Ø 350	5.0	Ø 19	340	440	260	Ø 368	730	73	73	190
200L	Ø 55	Ø 300	Ø 300	Ø 400	5.0	Ø 19	390	460	260	Ø 368	745	85	85	190

Frame Size	Shaft						
	D	E	F	G	SS	XX	ZZ
56	Ø9	20	3	7.2	M3	9	12
63	Ø 11	23	4	8.5	M4	10	14
71	Ø 14	30	5	11	M5	12	17
80	Ø 19	40	6	15.5	M6	16	21
90S	Ø 24	50	8	20	M8	19	25
90L1/L2	Ø 24	50	8	20	M8	19	25
100	Ø 28	60	8	24	M10	22	30
112	Ø 28	60	8	24	M10	22	30
132S	Ø 38	80	10	33	M12	28	37
132M/L	Ø 38	80	10	33	M12	28	37
160M/L	Ø 42	110	12	27	M16	36	45
180M/L	Ø 48	110	14	42.5	M18	36	45
200L	Ø 55	110	16	49	M20	42	53

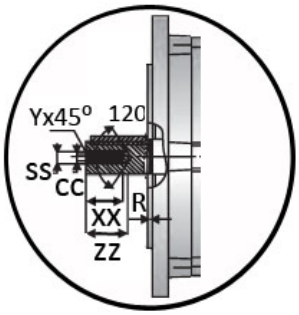

Tec Motors

TECA Aluminium Series – MS Design

Three Phase Asynchronous single speed motors

B14 Type – Flange Mounted

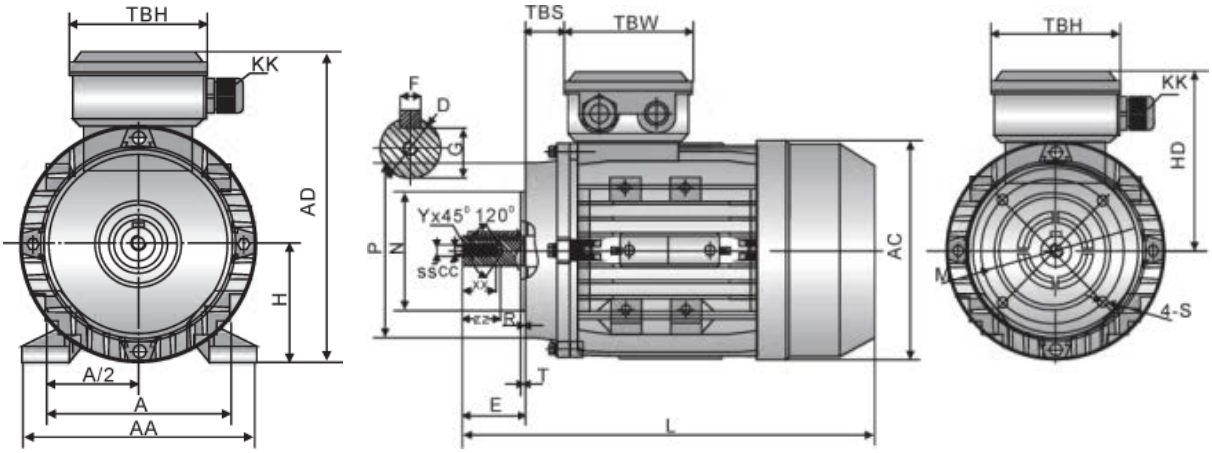

Frame Size	B14 Flange						General							
	D	M	N	P	R	S	AA	AD	HD	AC	L	TBS	TBW	TBH
56	Ø9	Ø65	50	80	2.5	M5	110	156	100	Ø 117	196	14	14	88
63	Ø 11	75	60	90	2.5	M5	120	171	108	Ø 130	220	14	14	94
71	Ø 14	85	70	105	2.5	M6	132	186	115	Ø 147	241	20	20	94
80	Ø 19	110	80	120	3.0	M6	160	213	133	Ø 163	290	27	27	105
90S	Ø 24	115	95	140	3.0	M8	175	229	139	Ø 183	312	30	30	105
90L1/L2	Ø 24	115	95	140	3.0	M8	175	229	139	Ø 183	337/367	30	30	105
100	Ø 28	130	110	160	3.5	M8	198	252	152	Ø 205	369	26	26	105
112	Ø 28	130	110	160	3.5	M8	220	279	167	Ø 229	395	32	32	112
132S	Ø 38	165	130	200	4.0	M10	252	318	186	Ø 265	437	38	38	112
132M/L	Ø 38	165	130	200	4.0	M10	252	318	186	Ø 265	475/501	38	38	112
160M/L	Ø 42	215	180	250	4.0	M10	290	384	224	Ø 325	640	64	64	143

Frame Size	Shaft						
	D	E	F	G	SS	XX	ZZ
56	Ø9	20	3	7.2	M3	9	12
63	Ø 11	23	4	8.5	M4	10	14
71	Ø 14	30	5	11	M5	12	17
80	Ø 19	40	6	15.5	M6	16	21
90S	Ø 24	50	8	20	M8	19	25
90L1/L2	Ø 24	50	8	20	M8	19	25
100	Ø 28	60	8	24	M10	22	30
112	Ø 28	60	8	24	M10	22	30
132S	Ø 38	80	10	33	M12	28	37
132M/L	Ø 38	80	10	33	M12	28	37
160M/L	Ø 42	110	12	27	M16	36	45
180M/L	Ø 48	110	14	42.5	M18	36	45
200L	Ø 55	110	16	49	M20	42	53

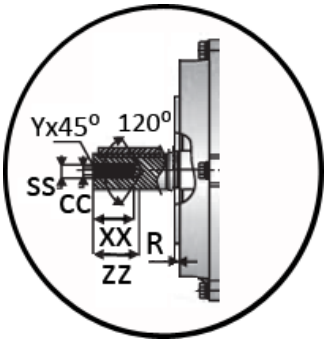

Tec Motors

General Features

High efficiency motors
All TEC motors are manufactured in line with the new European standard for high efficiency. (TECA and ECOL design)
The motors are totally enclosed, fan cooled, with squirrel cage rotor.
IEC 60034-30 standard defines three IE (International Efficiency) classes of single speed three phase cage induction motors 50Hz and 60Hz, 2, 4, 6 pole rated voltage up to 1000V, duty type S1-S8 with a rated cyclic duration factor of 80% or higher operating direct on line.

IE1 – Standard efficiency, S2 rated / Ex motors / 45˚C ambient rated motors.
IE2 – High efficiency from 0.75 to 375Kw, obligatory in Europe from 16.07.2012
IE3 – Premium efficiency from 7.5 to 375Kw, obligatory in Europe from 01.01.2015 and from 0.75 to 375Kw obligatory in Europe from 01.01.2017

Rated Power Output Kw	**Efficiency at full load**		
	2 Pole	**4 Pole**	**6 Pole**
0.75	>=80.7	>=82.5	>=78.9
1.1	>=82.7	>=84.1	>=81.0
1.5	>=84.2	>=85.3	>=82.5
2.2	>=85.9	>=86.7	>=84.3
3	>=87.1	>=87.7	>=85.6
4	>=88.1	>=88.6	>=86.8
5.5	>=89.2	>=89.6	>=88.0
7.5	>=90.1	>=90.4	>=89.1
11	>=91.2	>=91.4	>=90.3
15	>=91.9	>=92.1	>=91.2
18.5	>=92.4	>=92.6	>=91.7
22	>=92.7	>=93.0	>=92.2
30	>=93.3	>=93.6	>=92.9
37	>=93.7	>=93.9	>=93.3
45	>=94.0	>=94.2	>=93.7
55	>=94.3	>=94.6	>=94.1
75	>=94.7	>=95.0	>=94.6
90	>=95.0	>=95.2	>=94.9
110	>=95.2	>=95.4	>=95.1
132	>=95.4	>=95.6	>=95.4
160	>=95.6	>=95.8	>=95.6
200	>=95.8	>=96.0	>=95.8
250	>=95.8	>=96.0	>=95.8
280	>=95.8	>=96.0	>=95.8
315	>=95.8	>=96.0	>=95.8
355	>=95.8	>=96.0	>=95.8
375	>=95.8	>=96.0	>=95.8
400	>=95.8	>=96.0	>=95.8

Tec Motors

Terminal Box

The terminal block is normally equipped with 6 terminals and is made of non hygroscopic & mildew resistance material.
Terminal box for the TECA & ECOL TA design is made of Aluminium & Cast Iron or Tin for the ECOL TC design. All terminal boxes are IP55 as standard.
Terminal boxes in the TECA & ECOL TA designs from size 56 to size 90 are fitted with a cable gland and a plug. Size 100 to size 200 are fitted two cable glands.
Terminal boxes in the ECOL TC design are fitted with two cable glands. ECOL TC motors in frame 160 and above are fitted with an additional M16 auxiliary gland. The below table shows which gland sizes are fitted in which frame size.

Frame Size	Cable Gland	Frame Size	Cable Gland
TA/TECA56	1-M20x1.5	**TC132**	2-M25x1.5
TA/TECA63	1-M20x1.5	**TC160**	2-M32x1.5 + 1-M16x1.5
TA/TECA71	1-M20x1.5	**TC180**	2-M32x1.5 + 1-M16x1.5
TA/TECA80	1-M20x1.5	**TC200**	2-M40x1.5 + 1-M16x1.5
TA/TECA90	1-M25x1.5	**TC225**	2-M50x1.5 + 1-M16x1.5
TA/TECA100	1-M25x1.5	**TC250**	2-M50x1.5 + 1-M16x1.5
TA/TECA112	1-M25x1.5	**TC280**	2-M63x1.5 + 1-M16x1.5
TA/TECA132	1-M32x1.5	**TC315**	2-M63x1.5 + 1-M16x1.5
TA/TECA160	1-M32x1.5	**TC355**	2-M63x1.5 + 1-M16x1.5
TA/TECA180	1-M40x1.5		
TA/TECA200	1-M40x1.5		

Connection

Motors 4.0kw and above are usually delta connected (**Δ**)(400v) to allow star-delta starting (**⅄/Δ**). Motors 3.0kw and below are usually star connected (**⅄**)(400v) which gives the option of a 230/3/50 supply (**Δ**) for 1ph-3ph frequency drive connection.
Upon request for particular applications, based on the powers & supply voltage, motors can be star connected (**⅄**) .
Wiring diagrams are shown in the operation & maintenance manual attached to each motor.

Three phase motors – connect links as shown below.

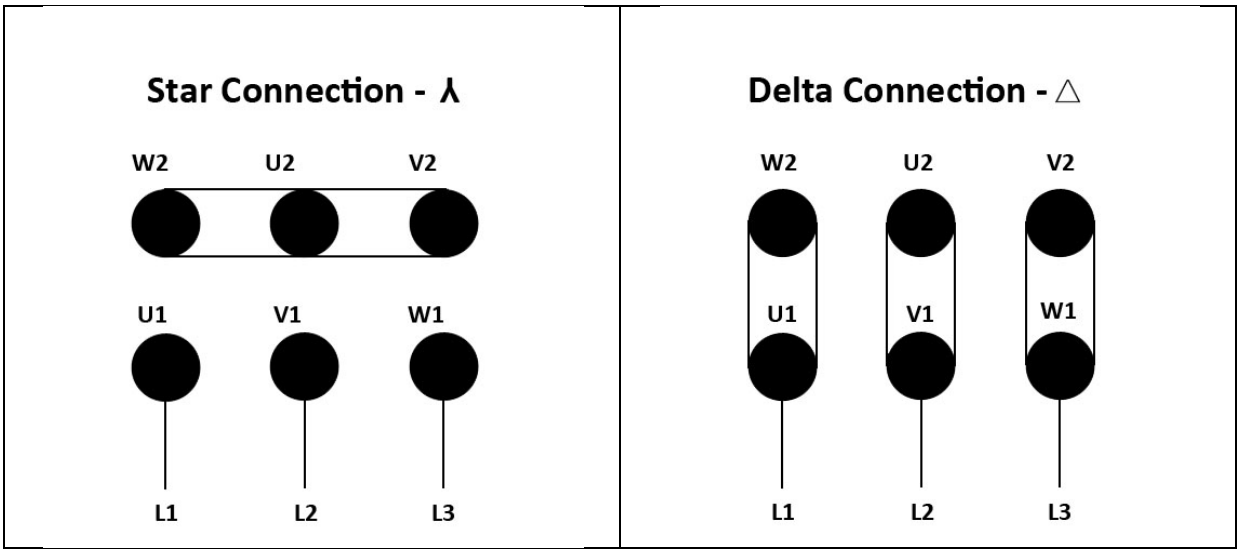

Tec Motors

TEC motor power & speed chart

Motor Power Chart	
HP	Kw
1.5	1.1
2.0	1.5
3.0	2.2
4.0	3
5.5	4
7.5	5.5
10.0	7.5
15.0	11
20.0	15
25.0	18.5
30.0	22
40.0	30
40.0	37
50.0	45
60.0	55
100.0	75
125.0	90
150.0	110
180.0	132
217.0	160
268.0	200
335.0	250
420.0	315

(1 Horsepower = 0.7456999 Kilowatts)

Motor Speed Chart	
2 Pole	2700-2950 rpm
4 Pole	1310-1470 rpm
6 Pole	840-975 rpm
8 Pole	680-725 rpm

Please note - This information is for guide purposes only. Pole speeds may vary between different motor powers (Kw). Other manufacturers may show different pole speeds. For confirmation please contact us.

Tec Motors

TECA Aluminium Series – MS Design
Three Phase Asynchronous single speed motors

Electrical data IE2 – 2 Pole (50Hz)

Frame Size	Power Kw	Eff. (%)	Current In(A) 400V	Power Factor (Cos ϕ)	RPM (rpm / min)	Cn (Nm)	Cs / Cn	Is / In
MS2 801	0.75	77.4	1.75	0.80	2840	2.49	2.9	5.8
MS2 802	1.1	80	2.42	0.82	2850	3.53	3.5	6.8
MS2 90S	1.5	81.4	3.20	0.83	2850	5.09	3.5	6.9
MS2 90L	2.2	83.2	4.54	0.84	2880	7.32	4.1	7.9
MS2 100L	3	84.6	5.88	0.87	2880	9.96	3.4	7.8
MS2 112M	4	86	7.54	0.89	2880	13.18	2.7	7.5
MS2 132S1	5.5	87.2	10.2	0.89	2900	18.25	2.4	7.7
MS2 132S2	7.5	88.1	13.8	0.89	2910	24.47	2.5	8.4
MS2 160M1	11	89.4	19.9	0.89	2930	20.23	2.4	7.6
MS2 160M2	15	90.3	26.2	0.89	2930	27.68	2.6	8.0
MS2 160L	18.5	90.9	32.6	0.90	2940	33.42	3.0	9.0
MS2 180M	22	91.3	38.6	0.90	2950	39.11	2.5	8.5
MS2 200L1	30	92	52.3	0.90	2960	51.93	2.4	8.0

Electrical data IE2 – 4 Pole (50Hz)

Frame Size	Power Kw	Eff. (%)	Current In(A) 400V	Power Factor (Cos ϕ)	RPM (rpm / min)	Cn (Nm)	Cs / Cn	Is / In
MS2 802	0.75	79.6	1.79	0.76	1410	5.27	2.8	5.3
MS2 90S	1.1	81.4	2.50	0.78	1420	7.61	3.8	5.7
MS2 90L	1.5	82.8	3.31	0.79	1420	10.39	4.0	7.2
MS2 100L1	2.2	84.3	4.83	0.78	1440	14.76	3.6	7.4
MS2 100L2	3	85.5	6.33	0.80	1440	20.13	3.8	7.8
MS2 112M	4	86.6	8.23	0.81	1440	28.80	3.1	7.1
MS2 132S	5.5	87.9	10.9	0.83	1450	35.25	2.6	7.4
MS2 132M	7.5	88.7	14.5	0.84	1450	48.21	2.8	7.7
MS2 160M	11	89.8	21.5	0.82	1450	71.86	2.7	7.7
MS2 160L	15	90.6	28.4	0.84	1450	97.90	2.4	7.3
MS2 180M	18.5	91.4	34.4	0.85	1460	121.32	2.2	7.4
MS2 180L	22	91.7	40.3	0.86	1460	143.26	2.3	7.5
MS2 200L	30	92.3	55.2	0.88	1470	195.54	2.8	7.6

Tec Motors

TECA Aluminium Series – MS Design
Three Phase Asynchronous single speed motors

Electrical data IE2 – 6 Pole (50Hz)

Frame Size	Power Kw	Eff. (%)	Current In(A) 400V	Power Factor (Cos ϕ)	RPM (rpm/min)	Cn (Nm)	Cs/Cn	Is/In
MS2 90S	0.75	78.0	2.01	0.71	925	7.75	3.1	4.7
MS2 90L	1.1	78.1	2.82	0.72	930	11.43	3.2	5
MS2 100L	1.5	80.0	3.71	0.73	940	15.09	3.1	5.9
MS2 112M	2.2	81.8	5.17	0.75	945	22.13	2.6	5.5
MS2 132S	3	83.3	6.84	0.76	960	30.32	2.2	5.7
MS2 132M1	4	84.6	8.86	0.77	960	41.25	2.4	6.2
MS2 132M2	5.5	86.0	12.0	0.77	960	54.86	2.6	6.7
MS2 160M	7.5	87.5	16.1	0.77	970	74.69	2	5.6
MS2 160L	11	89.0	22.9	0.78	970	108.92	2	5.8
MS2 180L	15	90.1	28.9	0.83	975	147.77	1.9	7.5
MS2 200L1	18.5	90.4	35.6	0.83	975	180.32	2.2	6.3
MS2 200L2	22	90.9	41.6	0.84	975	214.53	2.3	6.2

Tec Motors

Insulating & Winding

All TEC motors are manufactured as standard with class F insulation.

Soft Copper electrolytic wire is insulated using special enamel (double enamel). The type of enamel is classified as H insulation class. All insulating materials used to produce motors are in F or H insulation class.

The winding manufacturing process is as follows; initially the winding is impregnated by soaking it in oven-curing F class resins, it is tropicalized following a process including a spraying of anti-saline enamel and, finally, it is coated using a spray with heatproof, humidity proof, chemical agent and sea-ambient corrosive action resistant characteristics. The impregnation cycle is carried out under vacuum conditions (vacuum impregnation process VPI.

Characteristics	Tolerances
Efficiency	**Motor Power < 50Kw -15% di (1 – n) Motor Power > 50Kw -10% di (1 – n)**
Power Factor	**+1/6 (1 – cosϕ) Min 0.02 Max 0.07**
Locked Rotor Current	**+20% of guaranteed value**
Locked Rotor Torque	**-15% +25% of guaranteed value**
Pull Out Torque	**-10% of guaranteed value**
Slip	**±20% of guaranteed value**

Voltage & Frequency Variations

Motors will work as expected if the supply voltage variations are limited as stated in the Classification Society Standards, in particular, motors can run with voltage variations of 10% and frequency variations of 5% with a maximum combined variation of 10% and within the temperature rise as stated by the provisions of the Classification Society Standards.

Tec Motors

Noise

The technical features detailed in the table below contain the values of A-sound pressure level (LpA) and A sound power level (LwA), measured at a one meter distance.

Sound levels are measured in no-load conditions and have tolerances of +/- 3 dB(A).

Frame Size	A-sound pressure level (LpA) – A-sound power level (LwA) dB(A)							
	2 Poles		4 Poles		6 Poles		8 Poles	
	LpA	LwA	LpA	LwA	LpA	LwA	LpA	LwA
56	69	78	63	72	58	67	54	63
63	75	84	67	76	61	70	58	67
71	75	84	67	76	61	70	58	67
80	75	84	70	79	63	72	61	70
90	75	85	70	80	66	76	66	76
100	77	87	70	80	66	76	66	76
112	78	88	73	83	66	76	66	76
132	69	78	63	72	58	67	54	63
160	75	84	67	76	61	70	58	67
180	75	84	67	76	61	70	58	67
200	75	84	70	79	63	72	61	70
225	75	85	70	80	66	76	66	76
250	77	87	70	80	66	76	66	76
280	78	88	73	83	66	76	66	76
315	80	90	77	87	73	83	69	79
355	86	97	84	96	82	94	79	91

The values of the noise (LpA) and of the sound power (LwA) in the table are related to the operation at 50Hz, when the frequency changes these values change how indicated in the following table.

Supply Frequency Hz	% Noise level compared to the 50Hz value
10	60%
20	60%
30	70%
40	100%
50	100%
60	100%
80	120%

Tec Motors

Bearings

TECA and ECOL TA designs from frame size 56 to frame size 200 have sealed for life pre-lubricated ball bearings, DE and NDE side, C3 clearance.
ECOL TC designs in frame sizes up to 132 have sealed pre-lubricated ball bearings, DE and NDE side C3.
ECOL TC designs from frame size 160 to frame size 280(including 315 2pole) have open ball bearings, DE and NDE C3.
ECOL TC designs from frame size 315(4, 6 & 8 pole) to frame size 355, have roller bearings DE side and ball bearings NDE side.

All non sealed bearings need to be periodically re-lubricated according to the data given in the motors operation and maintenance manual.

All motors are fitted with thrust washers in order to minimise vibration. Locked bearing options are available upon request. The lifetime of bearings (in accordance with supplier data) is in excess of 40,000 hours, for motors with direct coupling.

In the table below are all mentioned specifications concerning bearings installed in TEC motors frame size 56-355.

Motor Frame Type	Poles	Mounting B3 Foot Mounted		Mounting B5/B14 Flanged Mounted	
		Bearing coupling side DE	Bearing coupling side NDE	Bearing coupling side DE	Bearing coupling side NDE
TA/MS56	2-4-6-8	6201-2RSC3	6201-2RSC3	6201-2RSC3	6201-2RSC3
TA/MS63	2-4-6-8	6201-2RSC3	6201-2RSC3	6201-2RSC3	6201-2RSC3
TA/MS71	2-4-6-8	6202-2RSC3	6202-2RSC3	6202-2RSC3	6202-2RSC3
TA/MS80	2-4-6-8	6204-2RSC3	6204-2RSC3	6204-2RSC3	6204-2RSC3
TA/MS90	2-4-6-8	6205-2RSC3	6205-2RSC3	6205-2RSC3	6205-2RSC3
TA/MS100	2-4-6-8	6206-2RSC3	6206-2RSC3	6206-2RSC3	6206-2RSC3
TA/MS112	2-4-6-8	6306-2RSC3	6206-2RSC3	6306-2RSC3	6206-2RSC3
TA/MS132	2-4-6-8	6308-2RSC3	6208-2RSC3	6308-2RSC3	6208-2RSC3
TA/MS160	2-4-6-8	6309-2RSC3	6209-2RSC3	6309-2RSC3	6209-2RSC3
TA/MS180	2-4-6-8	6311-2RSC3	6211-2RSC3	6311-2RSC3	6211-2RSC3
TA/MS200	2-4-6-8	6312-2RSC3	6212-2RSC3	6312-2RSC3	6212-2RSC3
TC132	2-4-6-8	6308-ZZC3	6308-ZZC3	6308-ZZC3	6308-ZZC3
TC160	2-4-6-8	6309C3	6309C3	6309C3	6309C3
TC180	2-4-6-8	6311C3	6311C3	6311C3	6311C3
TC200	2-4-6-8	6312C3	6312C3	6312C3	6312C3
TC225	2-4-6-8	6313C3	6313C3	6313C3	6313C3
TC250	2-4-6-8	6314C3	6314C3	6314C3	6314C3
TC280	2-4-6-8	6316C3	6316C3	6316C3	6316C3
TC315	2	6317C3	6317C3	6317C3	6317C3
TC315	4-6-8	NU319	6319C3	NU319	6319C3
TC355	2	6319C3	6319C3	6319C3	6319C3
TC355	4-6-8	NU322	6322C3	NU322	6322C3

Upon request motors can be modified with roller bearings at the DE, where non-standard, insulated bearings at the NDE and angular contact bearings at the DE.

PLEASE NOTE
TEC Motors in frames 280-355 frame in 4, 6 & 8 pole are fitted with an NU roller bearing as standard at the DE.
TEC Motors recommend that a '7' series angular contact bearing is fitted onto any motor 250 frame and above for vertically mounted shaft down applications.